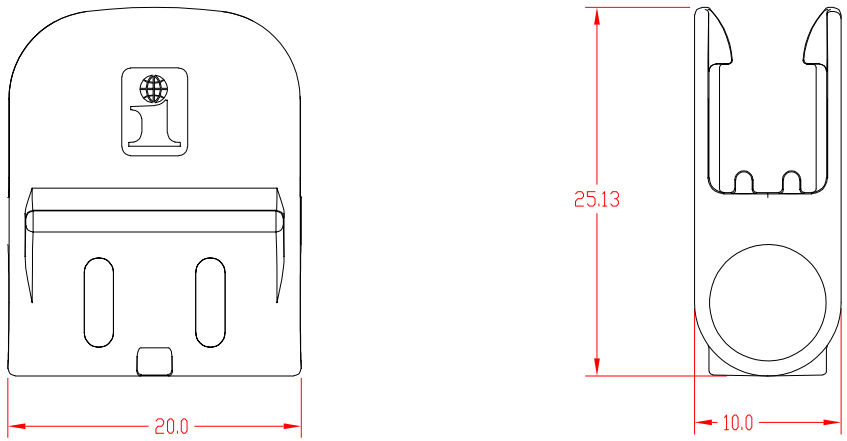

2D REV	3D REV	CHANGE DESCRIPTION	DATE	BY
A	A	Initial	5-11-21	JPC

THIS DRAWING AND THE CONTENT IS THE PROPERTY OF INTERPOWER CORP. AND IS PROPRIETARY INFORMATION. DO NOT RELEASE WITHOUT WRITTEN CONSENT

DIMENSIONS IN: mm

DRAFT BY: JPC DATE: 5-11-2021

DRAFTING APPROVAL: DATE:

MATERIAL:

TITLE: Cord Clip, Gray, molded

PART NUMBER: 65910020

DO NOT SCALE

SHEET 1 OF 1

INTERPOWER CORPORATION