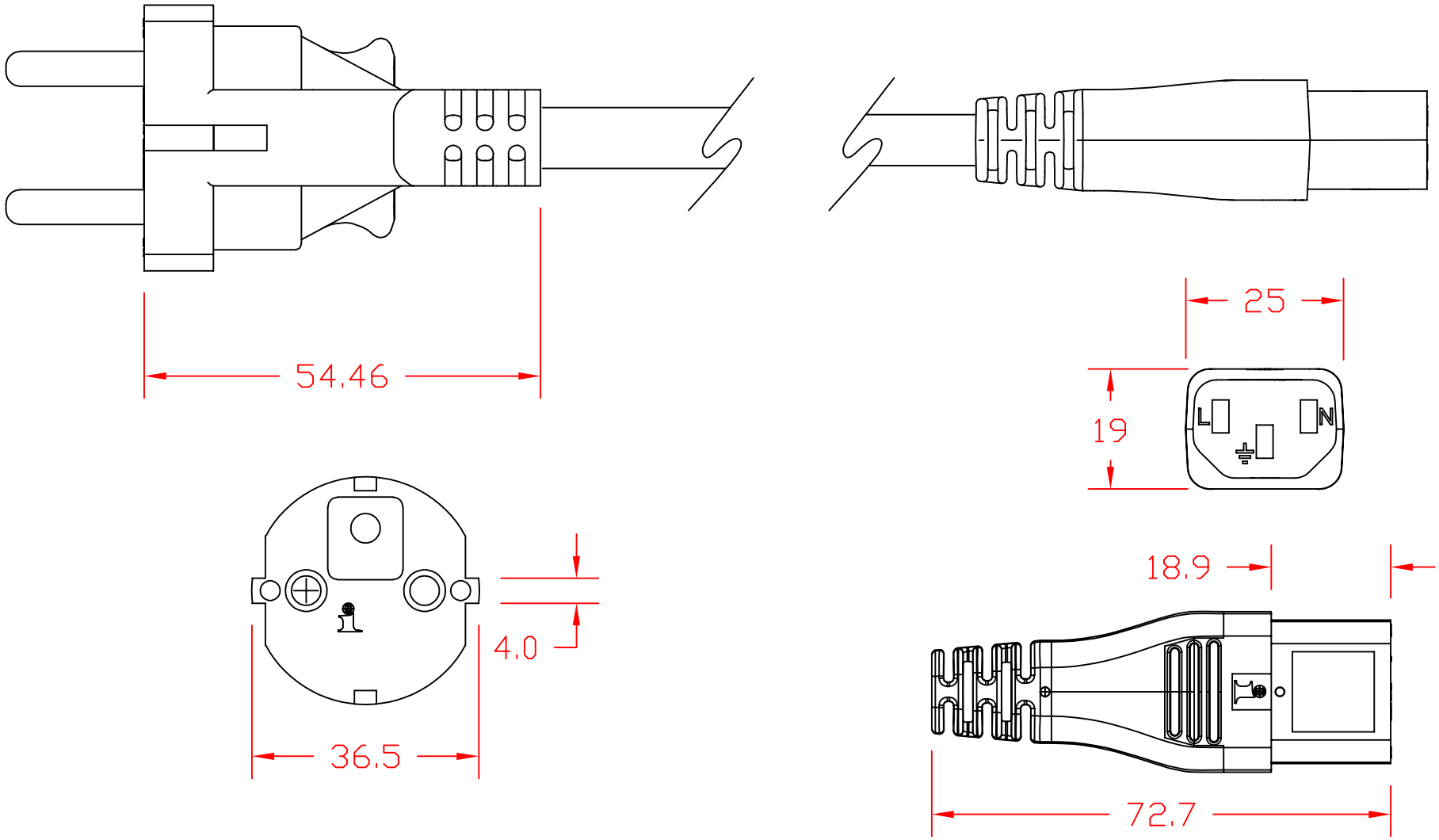

THIS DOCUMENT AND ITS CONTENTS ARE THE PROPRIETARY CONFIDENTIAL PROPERTY OF INTERPOWER CORPORATION. NO USE OR COPIES MAY BE MADE WITHOUT WRITTEN PERMISSION FROM INTERPOWER CORPORATION.

REV	CHANGE DESCRIPTION	DATE	INITIALS
A	New Part	04/18/23	JPC

DIMENSIONS IN MILLIMETERS

DRAFT BY: JPC DATE: 4-18-2023

DRAFTING APPROVAL: DDF DATE: 4-19-2023

MATERIAL: PVC

DO NOT SCALE

SHEET 1 OF 1

TITLE Continental European Cord Set

PART NUMBER: 86232790

INTERPOWER CORPORATION