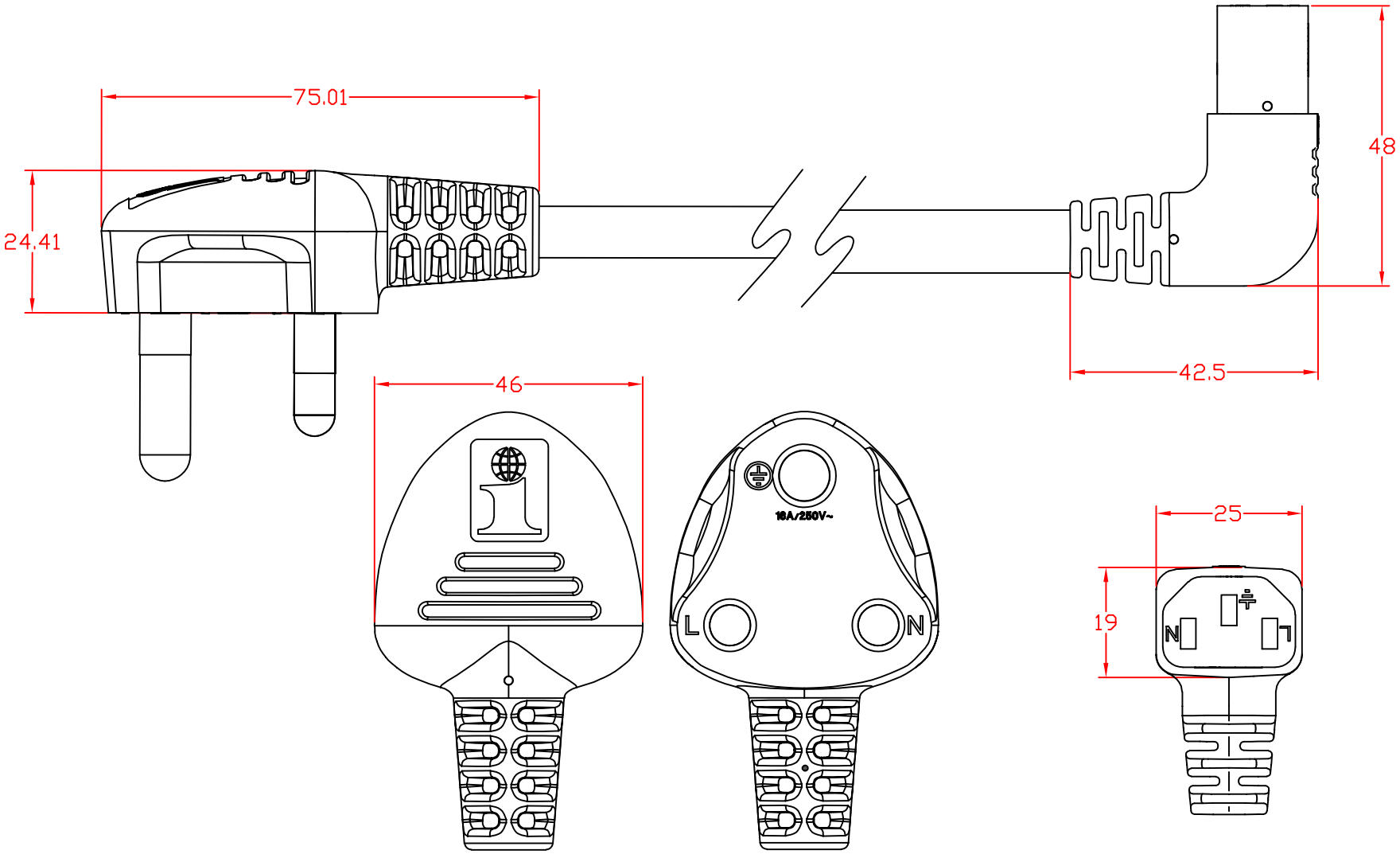

THIS DOCUMENT AND ITS CONTENTS ARE THE PROPRIETARY CONFIDENTIAL PROPERTY OF INTERPOWER CORPORATION. NO USE OR COPIES MAY BE MADE WITHOUT WRITTEN PERMISSION FROM INTERPOWER CORPORATION.

REV	CHANGE DESCRIPTION	DATE	Initials
D	Removed reference to India in title.	6/15/20	DDF
C	Removed all non-technical markings.	3/1/18	DDF
B	Added model no. dial and removed texture around markings.	10/11/11	DDF
A	Added new C13 connector view	3-28-11	JPC

DIMENSIONS IN MILLIMETERS

DRAFT BY: JC DATE: 9-14-07

DRAFTING APPROVAL: JC DATE: 9-14-07

MATERIAL: PVC

DO NOT SCALE

SHEET 1 OF 1

TITLE South Africa Cordset

PART NUMBER: 86265050

INTERPOWER CORPORATION