PANEL CUTOUT

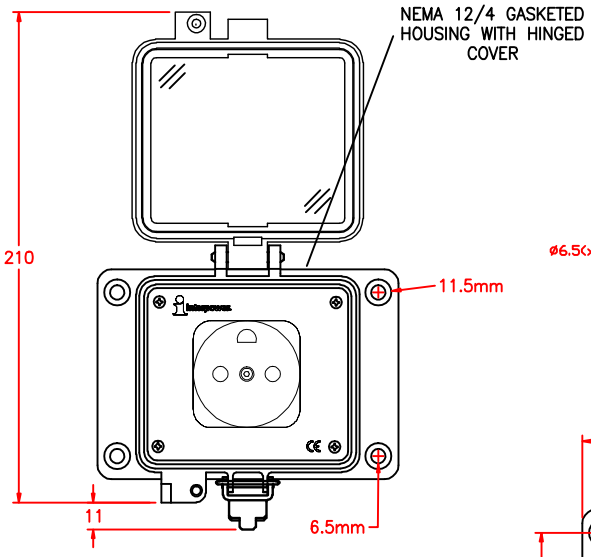

NOTE: Screw rescess is 5.3mm deep

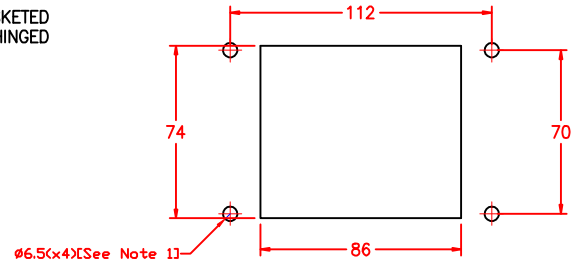

Note 1: Recommended diameter for thru-hole (screw/nut combination) hardware mounting method. Other methods will require holes with different dimensions and parameters.

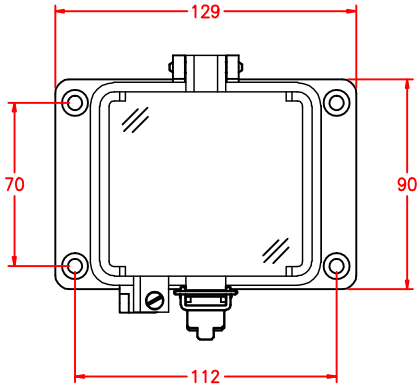

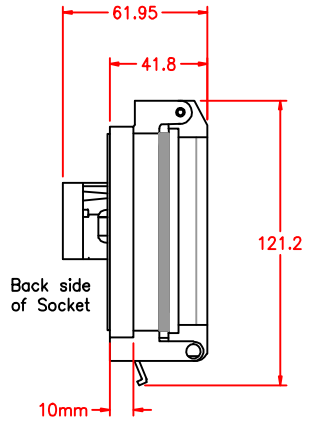

THIS DOCUMENT AND ITS CONTENTS ARE THE PROPRIETARY CONFIDENTIAL PROPERTY OF INTERPOWER CORPORATION. NO USE OR COPIES MAY BE MADE WITHOUT WRITTEN PERMISSION FROM INTERPOWER CORPORATION.

REV	CHANGE DESCRIPTION	DATE	INITIALS
A	Updated cutout dims and added Note 1.	3/19/12	DDF

DIMENSIONS IN MILLIMETERS

DRAFT BY: JC DATE: 1-24-2007

DRAFTING APPROVAL: JC DATE: 1-24-2007

MATERIAL:

DO NOT SCALE

SHEET 1 OF 1

TITLE Danish Socket w/box

PART NUMBER: 88052130

INTERPOWER CORPORATION